LONG SEAMS

COURSE	ORIENTATION	ORIENTATION
TOP	135°	315°
2	140°	320°

*VERT – TOP TO BOTTOM

Ship loose items:
(1) Swing Gate (A71-24 (GALV.))
(1) Ladder w/ Hardware
(1) Platform w/ Hardware
(2 PC.) Handrail w/ Hardware

*NOTE 8: (1) SPOT ON ANY ONE LS,
(1) SPOT ON ANY ONE CS.
(1) SPOT ON ANY ONE T-JOINT.

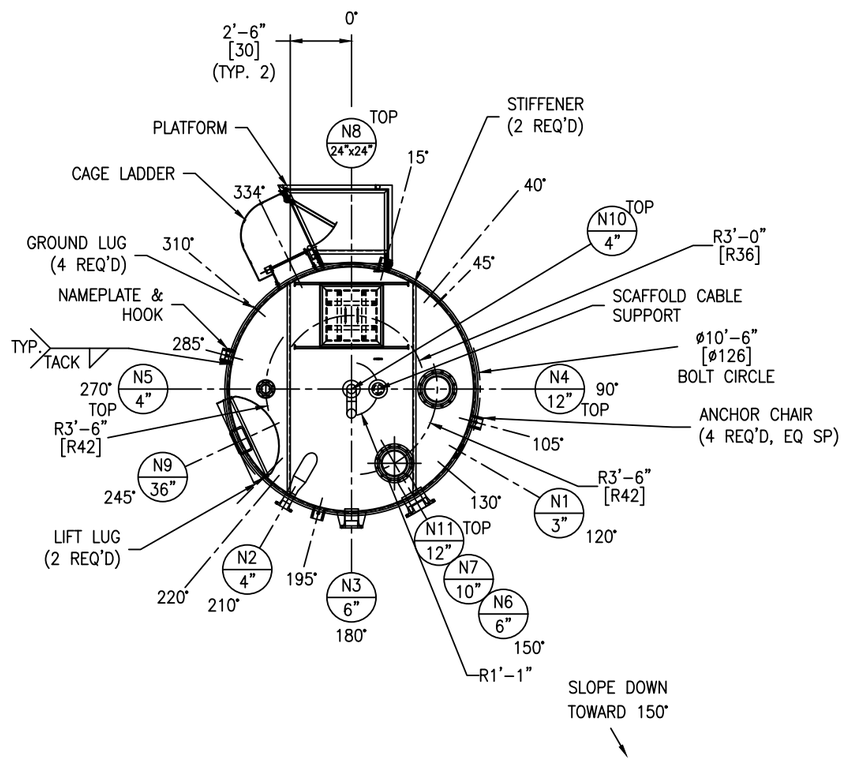

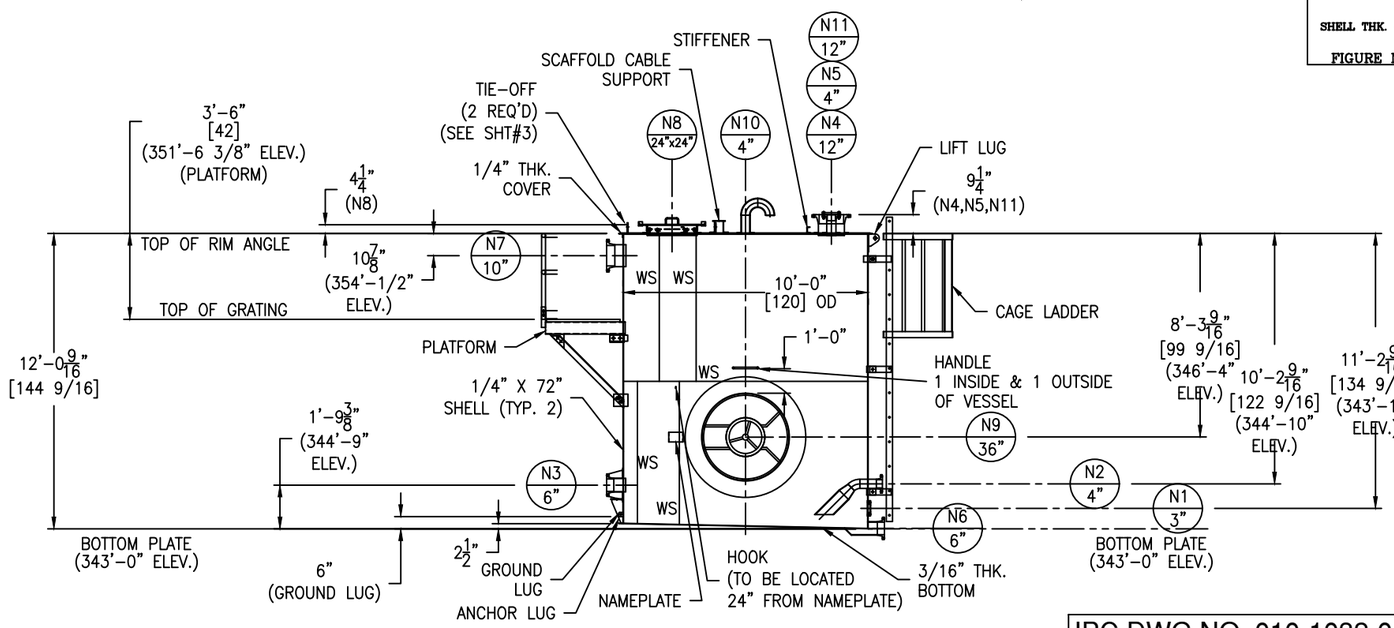

IPC DWG NO. 010-1032-047

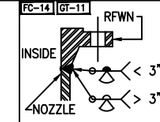

FIGURE NO. 2

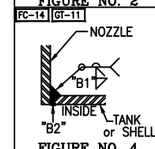

FIGURE NO. 4

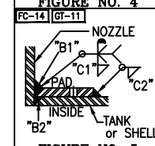

FIGURE NO. 5

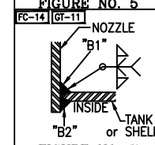

FIGURE NO. 7

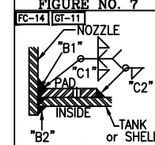

FIGURE NO. 8

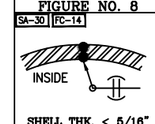

SHELL THK. < 5/16"

FIGURE NO. 9

NOZZLE SCHEDULE

MARK	SERVICE	SIZE	RATING	TYPE / STYLE	NECK SCHED.	PROJECTION EXT. (℄)	PROJECTION INT. (MIN.)	WELD FIGURE	REPAD SIZE (WIDTH X THK.)	WELD SIZE "A1"	"A2"	"B1"	"B2"	"C1"	"C2"
N1	LEVEL TRANSMITTER	3"	–	SPECIAL STUD PAD	–	–	–	4	–	–	–	1/4	1/8	–	–
N2	LCS PUMP SUCTION	4"	150#	RFWN	40S	SEE DWG	1"	2,7	–	–	–	1/4	1/4	–	–
N3	AGITATOR	6"	150#	RFWN	40S	8"	1"	2,8	5" X 3/16"	–	–	1/4	1/4	3/16	3/16
N4	LCS FROM BOW SCREENS	12"	150#	RFWN	40S	SEE DWG	1"	2,8	2" X 3/16"	–	–	1/4	1/4	3/16	3/16
N5	SPARE	4"	150#	RFWN W/ BLIND	40S	SEE DWG	1"	2,8	2" X 3/16"	–	–	1/4	1/4	3/16	3/16
N6	DRAIN	6"	150#	RFWN	40S	SEE DWG	–	2,4	–	–	–	1/2	1/4	–	–
N7	OVERFLOW	10"	150#	RFWN	40S	8"	1"	2,7	–	–	–	1/4	1/4	–	–
N8	HATCH	24"x24"	–	API 650	1/4"	SEE DWG	1"	8	2" X 3/16"	–	–	3/16	3/16	3/16	3/16
N9	MANWAY	36"	–	QUICK-OPEN# CM-2	1/4"	–	1"	8	8" X 3/16"	–	–	1/4	3/16	3/16	3/16
N10	VENT	4"	–	PIPE W/ELBOWS	40S	SEE DWG	–	5	2" X 3/16"	–	–	1/4	3/16	3/16	3/16
N11	LCS FROM BOW SCREEN	12"	150#	RFWN	40S	SEE DWG	1"	2,8	2" X 3/16"	–	–	1/4	1/4	3/16	3/16

MATERIALS OF CONSTRUCTION

	VESSEL
SHELL	SA240-304/304L
TOP/BOTTOM	SA240-304/304L
RIM ANGLE	SA479-304/304L
NOZZLE NECKS	SA312-304/304L WLD & SA403-304/304L WPW
NOZZLE FLANGES	SA182F-304/304L
STUDPAD	SA182F-304/304L
HATCH NECKS / COVER	SA240-304/304L
HATCH FLANGE	SA479-304/304L
MANWAY NECKS	SA240-304
MANWAY COVER	SA240-304
MANWAY GASKET	BUNA-N
NOZZLE GASKET	GARLOCK 3000
BOLTS/STUDS	SA193-B7 (ZINC PLATED)
NUTS	SA194-2H (ZINC PLATED)
REPADS	SA240-304/304L
LIFTING / TIE-OFF LUGS	SA240-304/304L
SUPPORTS/HOLD DOWNS	SA240-304/304L
LIFTING LUG	SA240-304/304L
STIFFENER	SA240-304/304L
GROUND LUG	SA240-304/304L
LADDER	SA36
TANK CLIPS (LADDER)	SA479-304/304L
TANK CLIPS (PLATFORM)	SA479-304/304L
HANDRAIL	SA500
HANDRAIL CLIPS	SA36
PLATFORM	SA36
PLATFORM BRACE CLIPS	SA36
PLATFORM CLIPS	SA479-304/304L
HANDLE	SA479-304/304L

DESIGN DATA

	VESSEL
DESIGN AND FAB. CODE	API650
CERT. STAMP REQ'D.	YES
DESIGN PRESSURE	ATM
DESIGN TEMPERATURE	150° F
MIN. DESIGN METAL TEMP.	-20° F @ ATM
OPERATING PRESSURE	ATM
OPERATING TEMPERATURE	MIN. 104° F / MAX. 122° F
JOINT EFFICIENCY HEADS	0.70
JOINT EFFICIENCY SHELL	0.70
CORROSION ALLOWANCE	0"
SPECIFIC GRAVITY	1.02
EARTHQUAKE ZONE	Ss = (0.157) S1 = (0.083)
WIND LOAD	INDOOR
STRESS RELIEF	NOT REQ'D
RADIOGRAPHIC EXAM	SPOT (PER CUSTOMER) SEE NOTE 8
DYE PENETRANT EXAM	SEE NOTE 7
MAGNETIC PARTICLE EXAM	NOT REQ'D
HYDROSTATIC TEST	–
PNEUMATIC TEST	2 PSIG / GAUGE #1
JKT HYDRO TEST	–
JKT DESIGN AND FAB. CODE	–
JKT CERT. STAMP REQ'D.	–
JKT DESIGN PRESSURE	–
JKT DESIGN TEMPERATURE	–
JKT MIN. DESIGN METAL TEMP.	–
JKT OPERATING PRESSURE	–
JKT OPERATING TEMPERATURE	–
JKT JOINT EFFICIENCY HEADS	–
JKT JOINT EFFICIENCY SHELL	–

VESSEL FINISH

INTERIOR WELD TREATMENT:	SAV TANK STANDARD
EXTERIOR WELD TREATMENT:	SAV TANK STANDARD
SAV TANK FINISHING STANDARD:	SEE NOTE 6
INSULATION:	N/A
GALVANIZING:	SEE NOTE 9

VESSEL CAPACITY AND WEIGHTS

OPERATING CAPACITY	–
FULL CAPACITY	7,000 GAL.
EMPTY VESSEL WEIGHT W/O ACCESSORIES	7,600 LBS.
WEIGHT FULL OF WATER	66,700 LBS.
WEIGHT FULL OF PRODUCT	67,900 LBS.
ACCESSORIES SHIPPING WEIGHT	600 LBS.

QUALITY CONTROL

ENG. _____ DATE: _____

Q.C. _____ DATE: _____

This drawing is issued for customer approval. please review, make approval changes (if any) in red. check the appropriate box, sign & date.

- ☐ Approval – no changes. Please proceed with fabrication.
- ☐ Approved as noted. Please proceed with fabrication
- ☐ Not approved. Please make changes and resubmit.

Customer signature _____ Date _____

GENERAL NOTES

1.) COVER ALL FLANGES, OPENINGS & MACHINED SURFACES PRIOR TO SHIPMENT UNLESS OTHERWISE NOTED.
2.) BOLT HOLES TO STRADDLE 0° & 180° UNLESS OTHERWISE NOTED.
3.) NOZZLE REPADS TO HAVE (1) ø1/4" TELL-TALE HOLES ON HORIZONTAL CENTER LINE.
ALL OTHER REPADS TO HAVE (1) ø1/4" WEEP HOLE AT LOWEST POINT ON PAD.
4.) MANUFACTURING TOLERANCE TO BE IN ACCORDANCE WITH API STANDARD 650 7.5.
5.) ASME MATERIALS TO CONFORM TO THE FOLLOWING: FLANGES – B16.5, FITTINGS – B16.9 & COUPLINGS – B16.11.
6.) PICKLE ALL EXTERIOR WELDS. PASSIVATE INTERIOR & EXTERIOR OF VESSEL.
7.) DYE PEN – SHELL TO BOTTOM SEAM & ALL SHELL NOZZLES
8.) (1) SPOT ON ANY ONE LS, (1) SPOT ON ANY ONE CS. (1) SPOT ON ANY ONE T-JOINT.
9.) GALVANIZING: HANDRAILS, LADDER, PLATFORM & GRATING TO BE HOT DIPPED GALVANIZED.

REVISIONS

REV	D.BY	C.BY	DATE	DESCRIPTION
				AS BUILT
2	AD	–	5/22/25	CERTIFIED
1	RS	NP	4/10/25	APPROVAL REV 1
0	AD	RS	3/4/25	APPROVAL

Savannah Tank & Equipment Corp.
1517 Telfair Road, Savannah, GA 31415
(912) 233-8902

DRAWN BY: AD
CHK'D BY: RS
APPROVED BY: NP
SCALE: 1/4" = 1'-0"

IRVING
BOW SCREEN RECOVERY FIBER TANK
EQUIP. #010-1032-TAN-002-00
CUST. PO #20615990

DRAWING NO.: 033-25-1 SHT 1 OF 7 REV. SET 2

FC-14

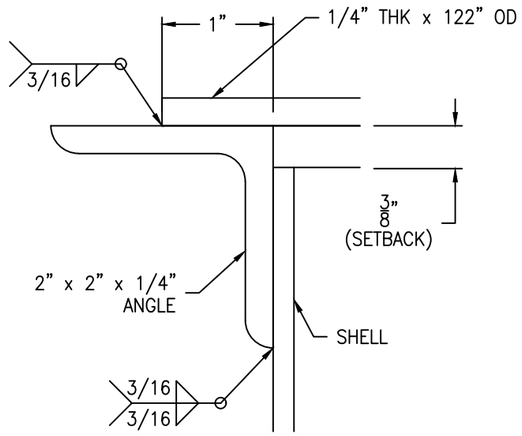

ROOF DETAIL

SCALE: 1'-0" = 1'-0"

FC-14

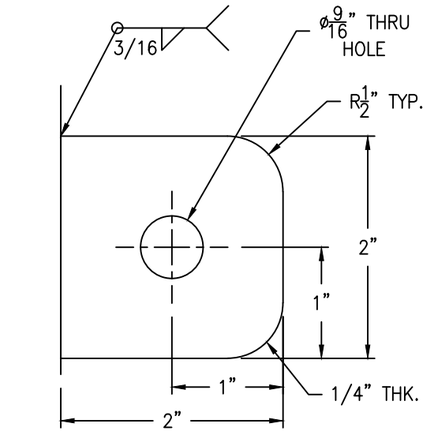

LUGS LOCATED AT 40°, 130°, 220° & 310°

GROUND LUG DETAIL

(4 REQ'D) SCALE: 1'-0" = 1'-0"

FC-14

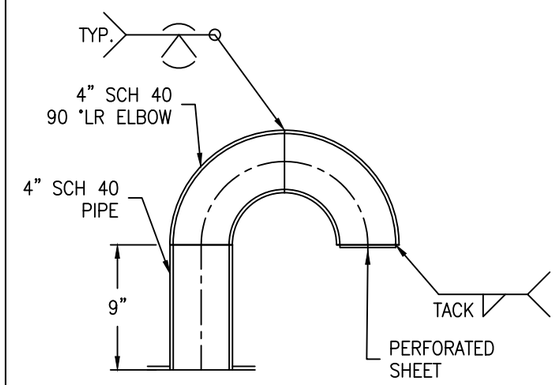

NOZZLE N10 DETAIL

SCALE: 1 1/2" = 1'-0"

FC-14

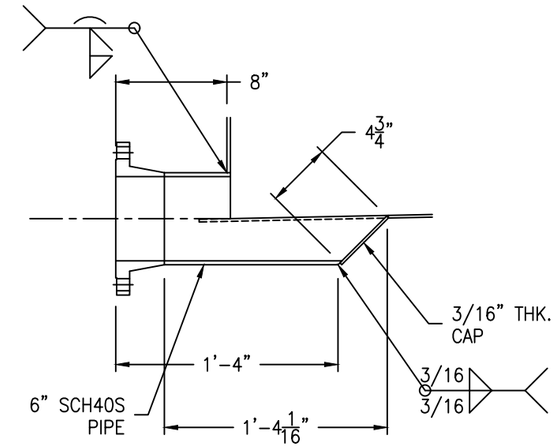

NOZZLE N6 DETAIL

SCALE: 1 1/2" = 1'-0"

FC-14

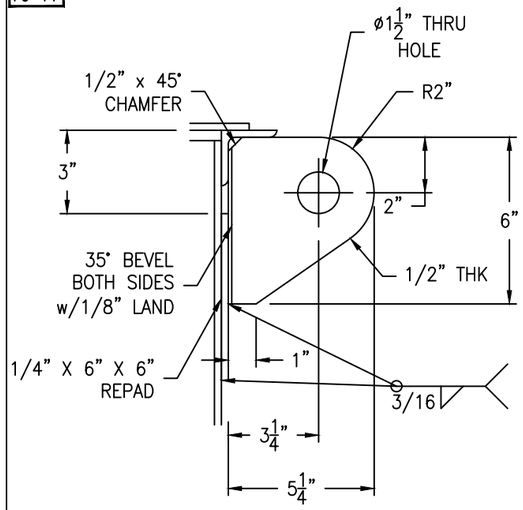

TANK WT. <= 10000#

SHACKLE PIN DIA. = 1"

ANGLE LIFT LUG DETAIL

(2 REQ'D) SCALE: 3" = 1'-0"

FC-14

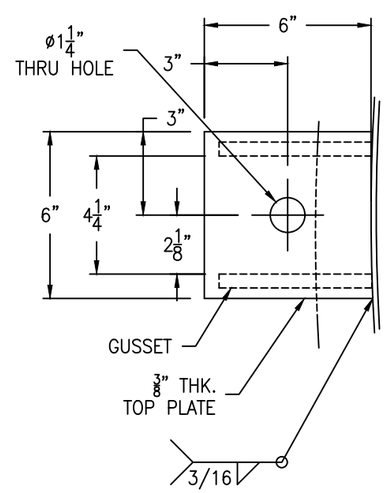

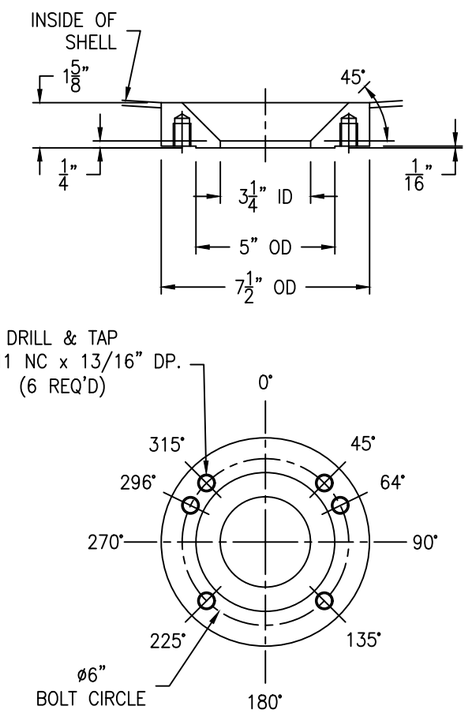

NOZZLE N1 DETAIL

SCALE: 3" = 1'-0"

FC-14

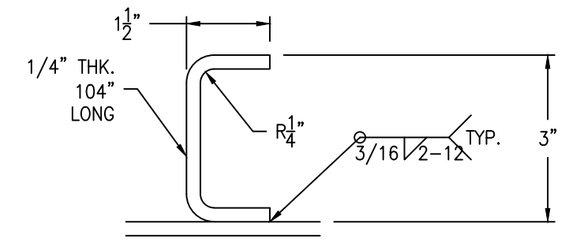

FORMED CHANNEL DETAIL

(2 REQ'D) SCALE: 6" = 1'-0"

FC-14

HANDLE DETAIL

(2 REQ'D) SCALE: 6" = 1'-0"

FC-14

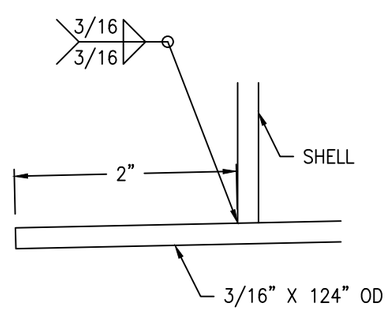

*NOTE: BOTTOM TO SLOPE 1/4" EVERY 1'-0"

BOTTOM DETAIL

SCALE: 1'-0" = 1'-0"

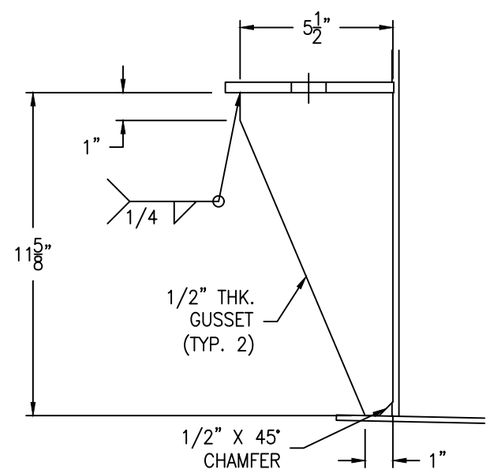

ANCHOR LUG DETAIL

(4 REQ'D) SCALE: 3" = 1'-0"

Bolting for blinds
N5: (8) 5/8-11 NC x 3" HH BOLT
(8) 5/8-11 NC HH NUT
(1) 4" 150# RING GASKET x 1/8"

IPC DWG NO.
010-1032-048

REV	D.BY	C.BY	DATE	DESCRIPTION
				AS BUILT
2	AD	–	5/22/25	CERTIFIED
1	RS	NP	4/10/25	APPROVAL REV 1
0	AD	RS	3/4/25	APPROVAL

1 REVISIONS

Savannah Tank & Equipment Corp.
1517 Telfair Road, Savannah, GA 31415
(912) 233-8902

DRAWN BY: AD
CHK'D BY: RS
APPROVED BY: NP
SCALE: 1/4" = 1'-0"

IRVING
BOW SCREEN RECOVERY FIBER TANK
EQUIP. #010-1032-TAN-002-00
CUST. PO #20615990

DRAWING NO.: 033-25-2 SHT 2 OF 7 REV. SET 2

FC-14

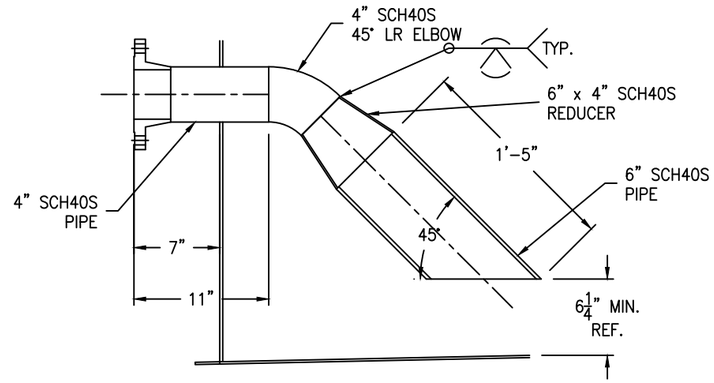

NOZZLE N2 DETAIL

SCALE: 1 1/2" = 1'-0"

FC-14

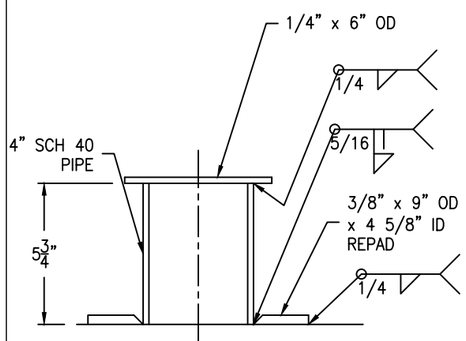

SCAFFOLD CABLE SUPPORT DETAIL

SCALE: 3" = 1'-0"

FC-14

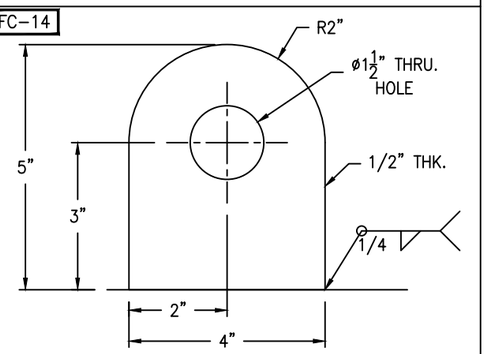

SHACKLE PIN DIA. = 3/4"

TIE-OFF LUG DETAIL

(2 REQ'D) SCALE: 6" = 1'-0"

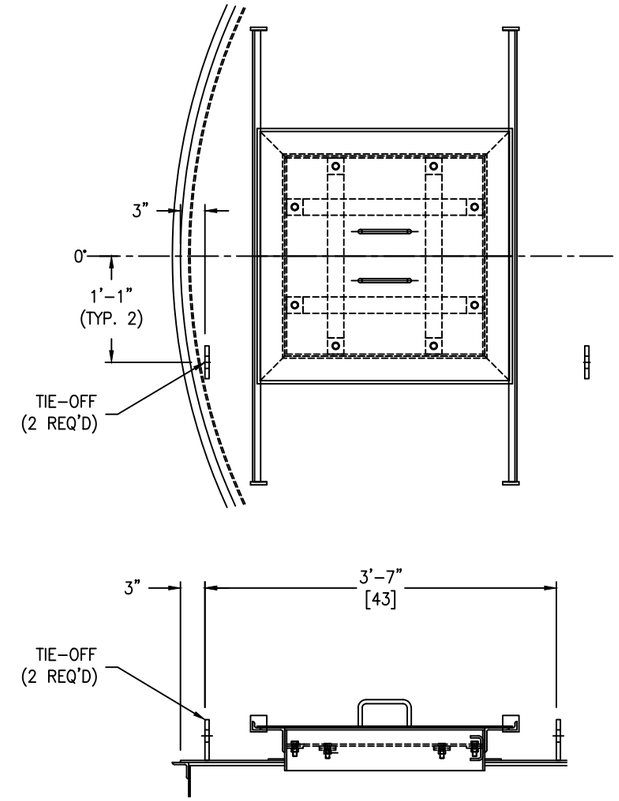

TIE-OFF LUG LOCATION DETAIL

SCALE: 1" = 1'-0"

FC-14

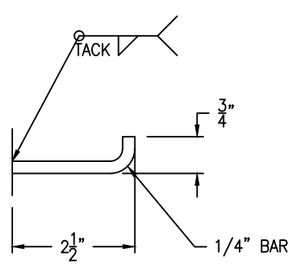

HOOK DETAIL

SCALE: 6" = 1'-0"

FC-14

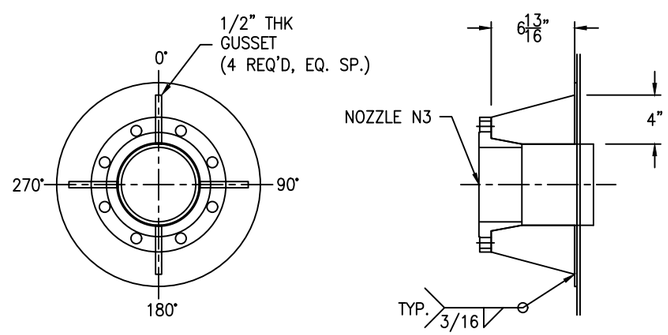

NOZZLE N3 DETAIL

SCALE: 1 1/2" = 1'-0"

IPC DWG NO. 010-1032-049

REV	D.BY	C.BY	DATE	DESCRIPTION
				AS BUILT
2	AD	–	5/22/25	CERTIFIED
1	RS	NP	4/10/25	APPROVAL REV 1
0	AD	RS	3/4/25	APPROVAL

⚠1 REVISIONS

Savannah Tank & Equipment Corp.
1517 Telfair Road, Savannah, GA 31415
(912) 233-8902

DRAWN BY: AD
CHK'D BY: RS
APPROVED BY: NP
SCALE: 1/4" = 1'-0"

IRVING
BOW SCREEN RECOVERY FIBER TANK
EQUIP. #010-1032-TAN-002-00
CUST. PO #20615990

DRAWING NO.: 033-25-3 SHT 3 OF 7 REV. SET 2

LADDER CLIP BOLTING:
(6) 5/8-11 NC X 2" HH BOLT - SA193-B7 (ZINC PLATED)
(6) 5/8-11 NC HH NUT - SA194-2H (ZINC PLATED)

HOOP A/HANDRAIL CLIP BOLTING:
(1) 5/8-11 NC X 1 1/2" HH BOLT - SA193-B7 (ZINC PLATED)
(1) 5/8-11 NC HH NUT - SA194-2H (ZINC PLATED)

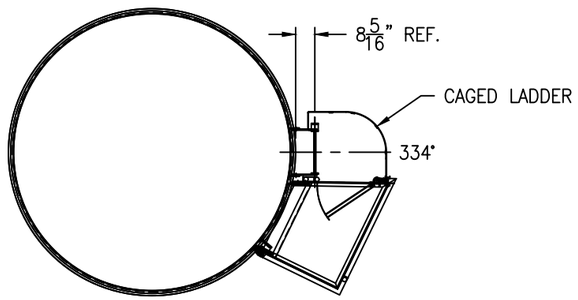

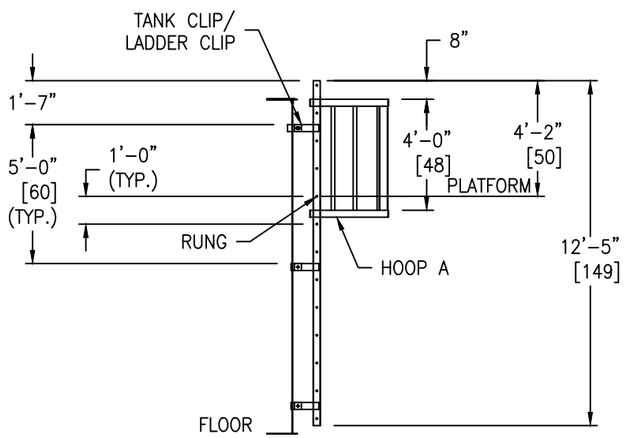

GM-73

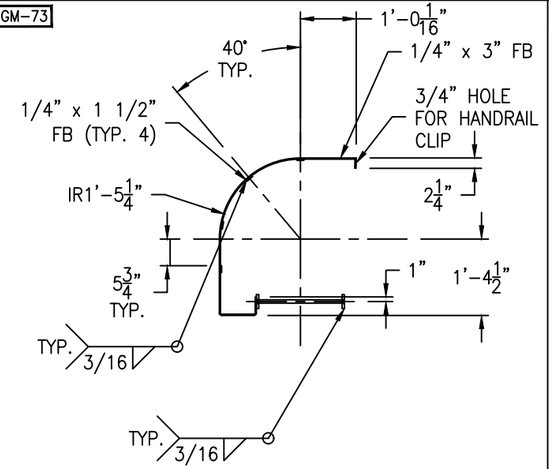

HOOP "A" DETAIL

(2 REQ'D) SCALE: 1/2" = 1'-0"

GM-73

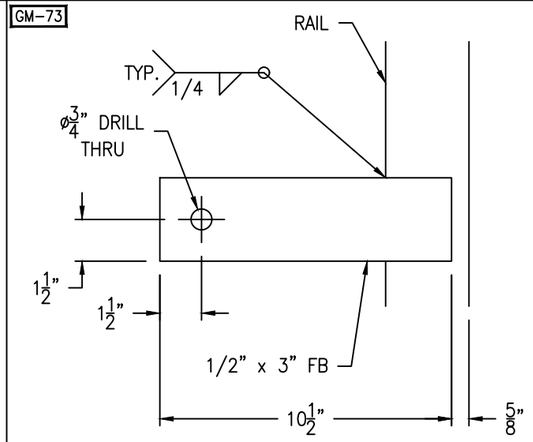

LADDER CLIP DETAIL

(6 REQ'D) SCALE: 3" = 1'-0"

GM-73

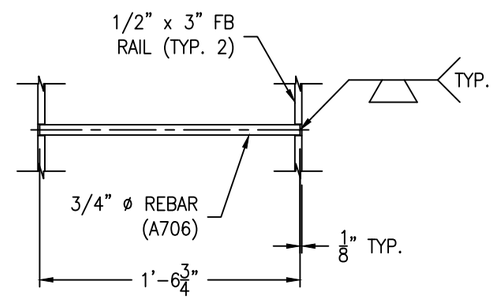

RUNG DETAIL

(13 REQ'D) SCALE: 1 1/2" = 1'-0"

FC-14

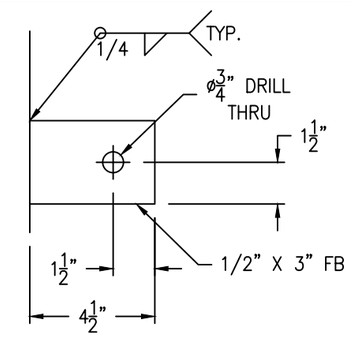

TANK CLIP DETAIL

(6 REQ'D) SCALE: 3" = 1'-0"

FC-14

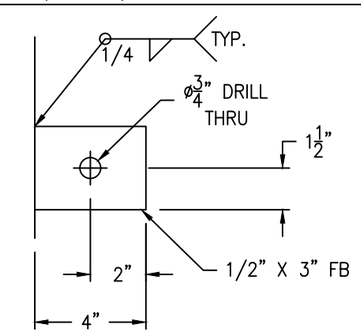

HANDRAIL CLIP DETAIL

(1 REQ'D) SCALE: 3" = 1'-0"

IPC DWG NO. 010-1032-050

LADDER TO BE HOT-DIPPED GALVANIZED

REV	D.BY	C.BY	DATE	DESCRIPTION
				AS BUILT
2	AD	-	5/22/25	CERTIFIED
1	RS	NP	4/10/25	APPROVAL REV 1
0	AD	RS	3/4/25	APPROVAL

1 REVISIONS

Savannah Tank & Equipment Corp.
1517 Telfair Road, Savannah, GA 31415
(912) 233-8902

DRAWN BY: AD
CHK'D BY: RS
APPROVED BY: NP
SCALE: 1/4" = 1'-0"

IRVING
BOW SCREEN RECOVERY FIBER TANK
EQUIP. #010-1032-TAN-002-00
CUST. PO #20615990

DRAWING NO.: 033-25-4 SHT 4 OF 7 REV. SET 2

IPC DWG NO. 010-1032-077

GM-73 GM-73
FC-14

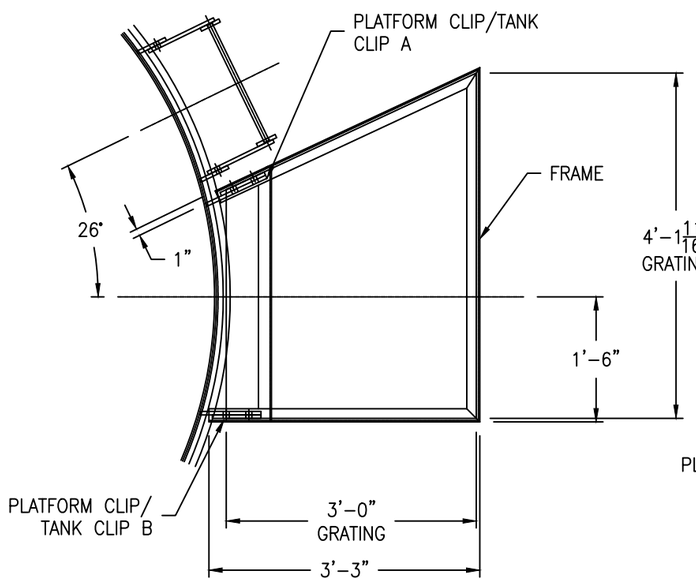

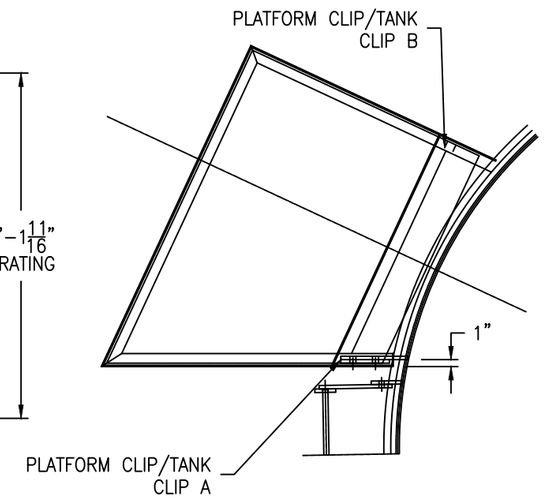

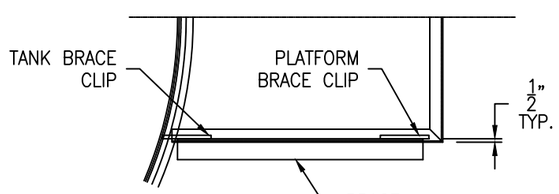

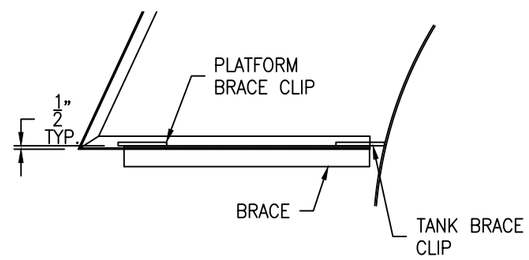

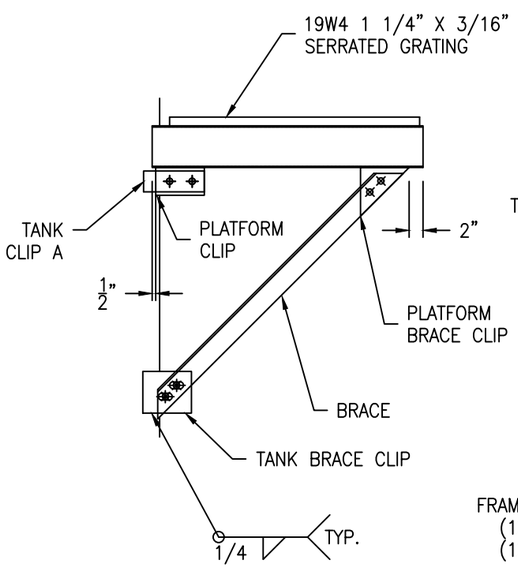

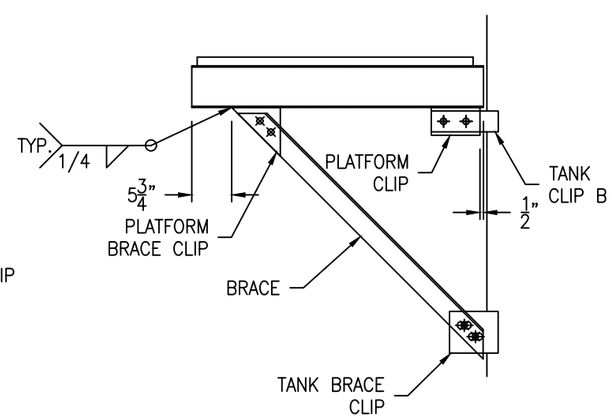

FRAME SUPPORT BOLTING:
(12) 3/4-10 NC X 2" HH BOLT - SA193-B7 (ZINC PLATED)
(12) 3/4-10 NC HH NUT - SA194-2H (ZINC PLATED)

SCALE: 3/4" = 1'-0"

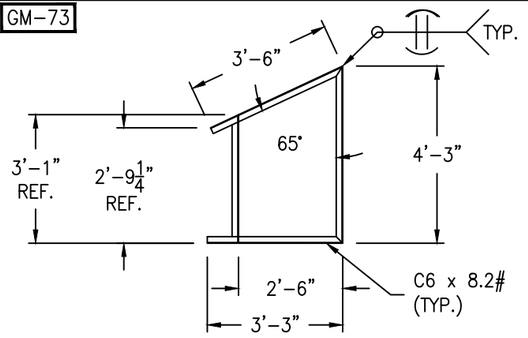

PLATFORM FRAME DETAIL

SCALE: 3/8" = 1'-0"

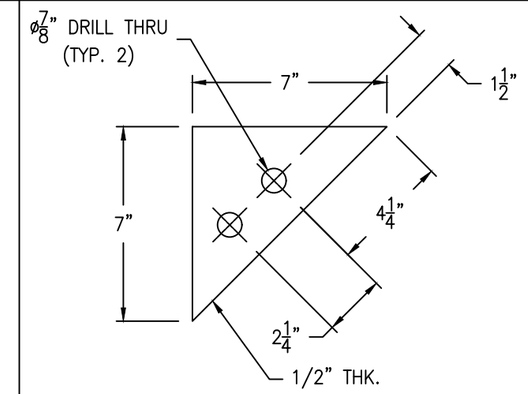

PLATFORM BRACE CLIP DETAIL

(2 REQ'D) SCALE: 3" = 1'-0"

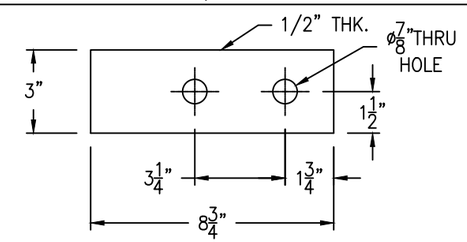

TANK CLIP B DETAIL

SCALE: 3" = 1'-0"

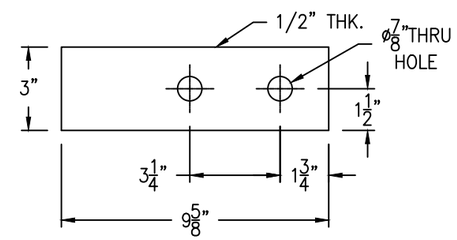

TANK CLIP A DETAIL

SCALE: 3" = 1'-0"

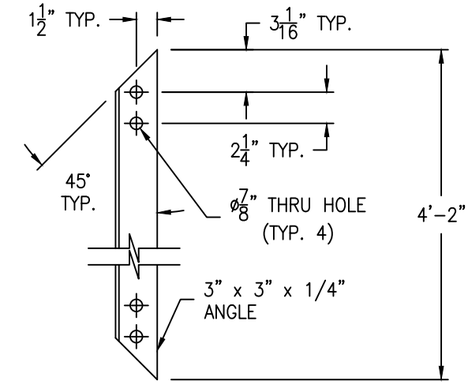

BRACE DETAIL

(2 REQ'D) SCALE: 1 1/2" = 1'-0"

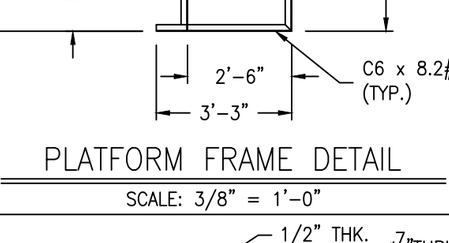

PLATFORM CLIP DETAIL

(2 REQ'D) SCALE: 3" = 1'-0"

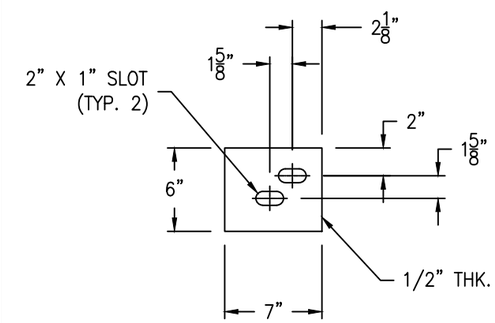

TANK BRACE CLIP DETAIL

(2 REQ'D) SCALE: 1 1/2" = 1'-0"

PLATFORM TO BE HOT-DIPPED GALVANIZED

GRATING TO BE HOT-DIPPED GALVANIZED

REV	D.BY	C.BY	DATE	DESCRIPTION
				AS BUILT
2	AD	-	5/22/25	CERTIFIED
1	RS	NP	4/10/25	APPROVAL REV 1
0	AD	RS	3/4/25	APPROVAL

1 REVISIONS

Savannah Tank & Equipment Corp.
1517 Telfair Road, Savannah, GA 31415
(912) 233-8902

DRAWN BY: AD
CHK'D BY: RS
APPROVED BY: NP
SCALE: 3/8" = 1'-0"

IRVING
BOW SCREEN RECOVERY FIBER TANK
EQUIP. #010-1032-TAN-002-00
CUST. PO #20615990

DRAWING NO.: 033-25-5 SHT 5 OF 7 REV. SET 2

HANDRAIL BOLTING:
(10) 1/2-13 NC X 3" HH BOLT - SA193-B7 (ZINC PLATED)
(10) 1/2-13 NC HH NUT - SA194-2H (ZINC PLATED)

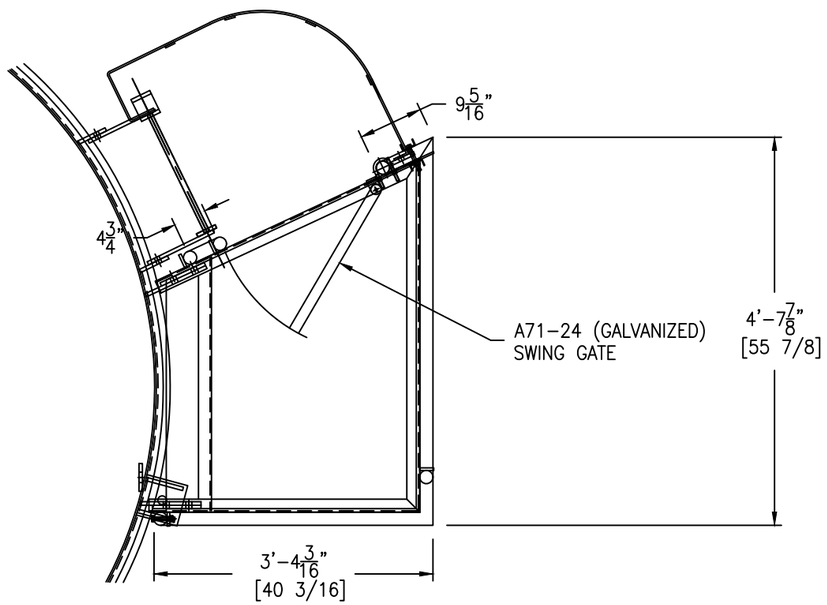

SCALE: 3/4" = 1'-0"

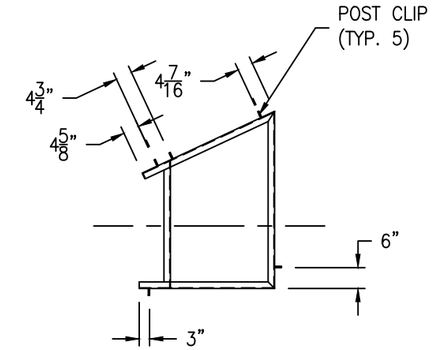

POST CLIP DETAIL

SCALE: 3/8" = 1'-0"

GM-73

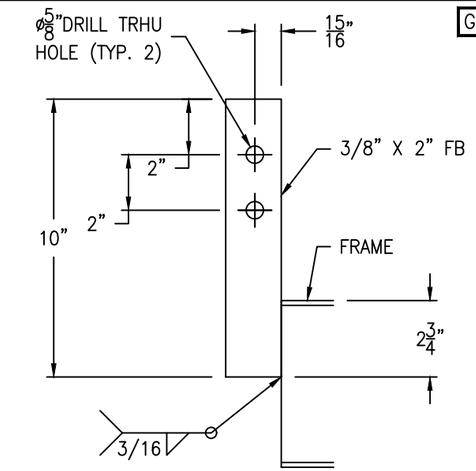

POST CLIP DETAIL

(5 REQ'D) SCALE: 3" = 1'-0"

GM-73

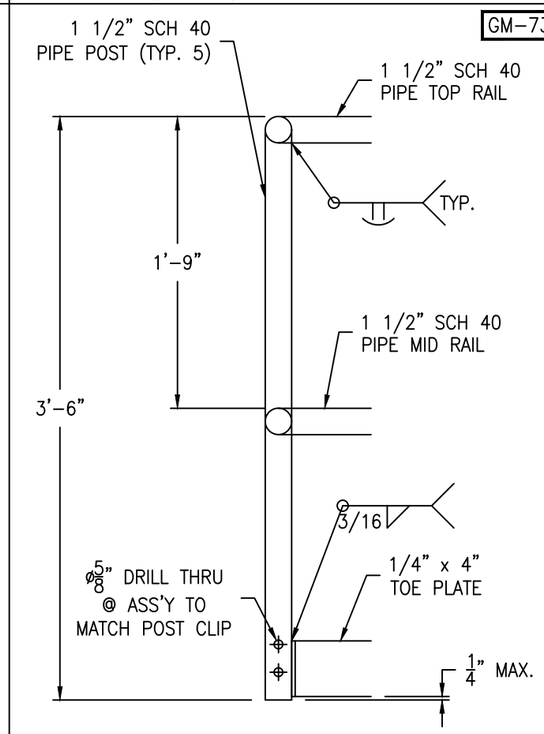

*NOTE: DRILL HOLES IN RAILS AND POSTS IF GALVANIZED.

HANDRAIL DETAIL

SCALE: 1 1/2" = 1'-0"

IPC DWG NO. 010-1032-078

HANDRAIL TO BE HOT-DIPPED GALVANIZED

REV	D.BY	C.BY	DATE	DESCRIPTION
				AS BUILT
2	AD	-	5/22/25	CERTIFIED
1	RS	NP	4/10/25	APPROVAL REV 1
0	AD	RS	3/4/25	APPROVAL

REVISIONS

Savannah Tank & Equipment Corp.
1517 Telfair Road, Savannah, GA 31415
(912) 233-8902

DRAWN BY: AD
CHK'D BY: RS
APPROVED BY: NP
SCALE: 3/8" = 1'-0"

IRVING
BOW SCREEN RECOVERY FIBER TANK
EQUIP. #010-1032-TAN-002-00
CUST. PO #20615990

DRAWING NO.: 033-25-6 SHT 6 OF 7 REV. SET 2

FC-14

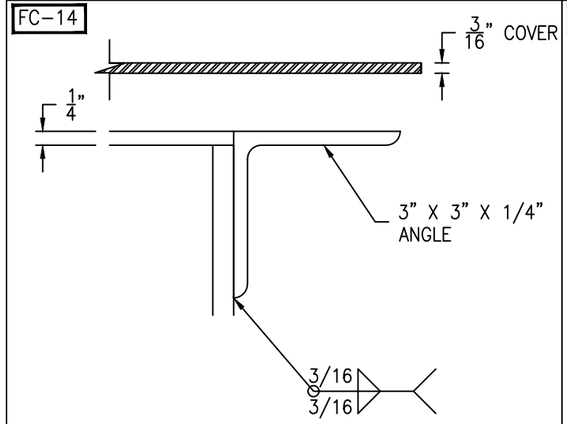

FLANGE/COVER DETAIL

(1 REQ'D) SCALE: 6" = 1'-0"

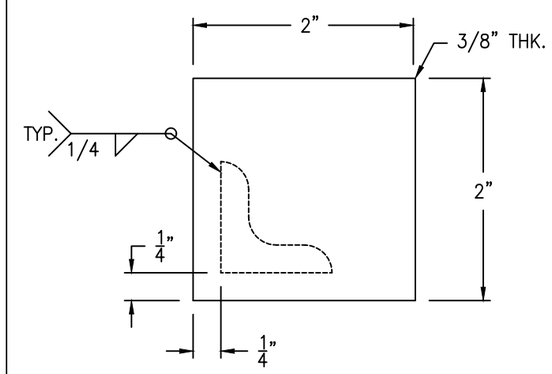

STOP DETAIL

(4 REQ'D) SCALE: 12" = 1'-0"

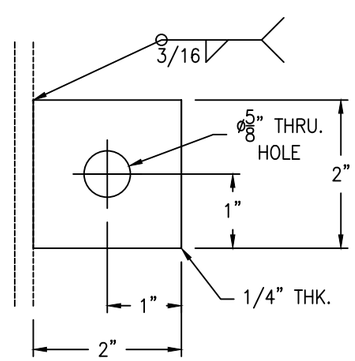

CLIP DETAIL

(8 REQ'D) SCALE: 2" = 1'-0"

FC-14

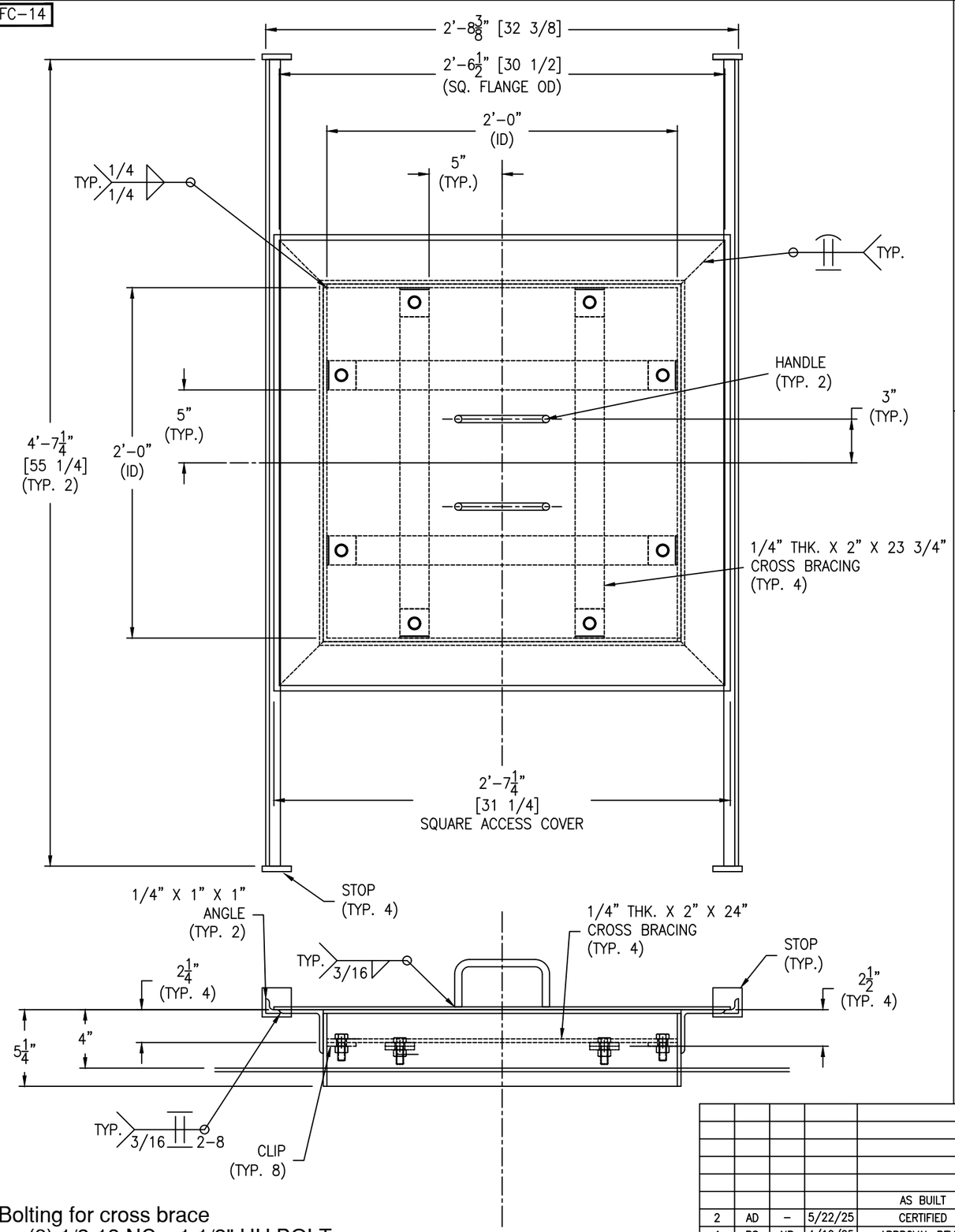

Bolting for cross brace
(8) 1/2-13 NC x 1 1/2" HH BOLT
(8) 1/2-13 NC HH NUT

IPC DWG NO. 010-1032-079

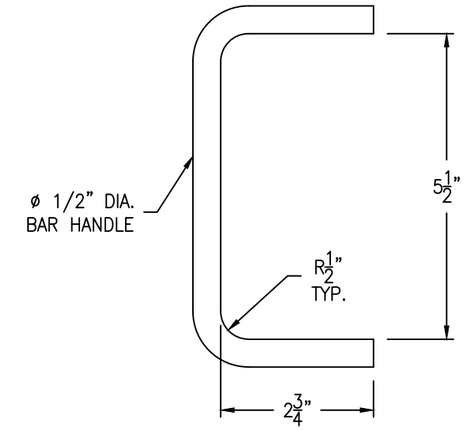

HANDLE DETAIL

(2 REQ'D) SCALE: 6" = 1'-0"

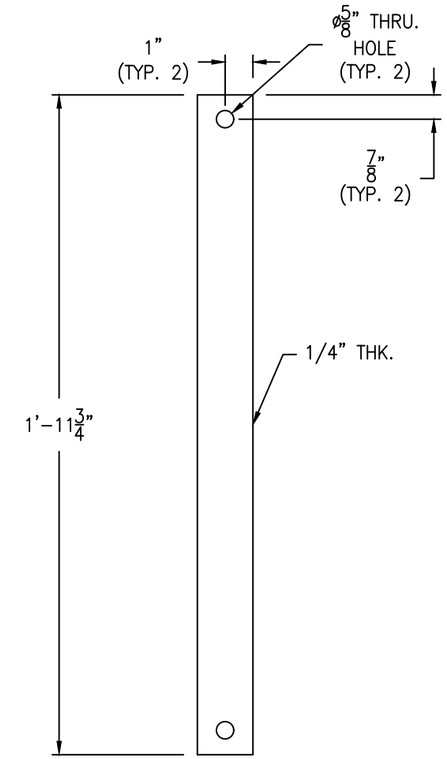

CROSS BRACE DETAIL

(4 REQ'D) SCALE: 3" = 1'-0"

REV	D.BY	C.BY	DATE	DESCRIPTION
				AS BUILT
2	AD	–	5/22/25	CERTIFIED
1	RS	NP	4/10/25	APPROVAL REV 1
0	AD	RS	3/4/25	APPROVAL

⚠1 REVISIONS

Savannah Tank & Equipment Corp.
1517 Telfair Road, Savannah, GA 31415
(912) 233-8902

DRAWN BY: AD
CHK'D BY: RS
APPROVED BY: NP
SCALE: 2" = 1'-0"

IRVING
BOW SCREEN RECOVERY FIBER TANK
EQUIP. #010-1032-TAN-002-00
CUST. PO #20615990

DRAWING NO.: 033-25-7 SHT 7 OF 7 REV. SET 2